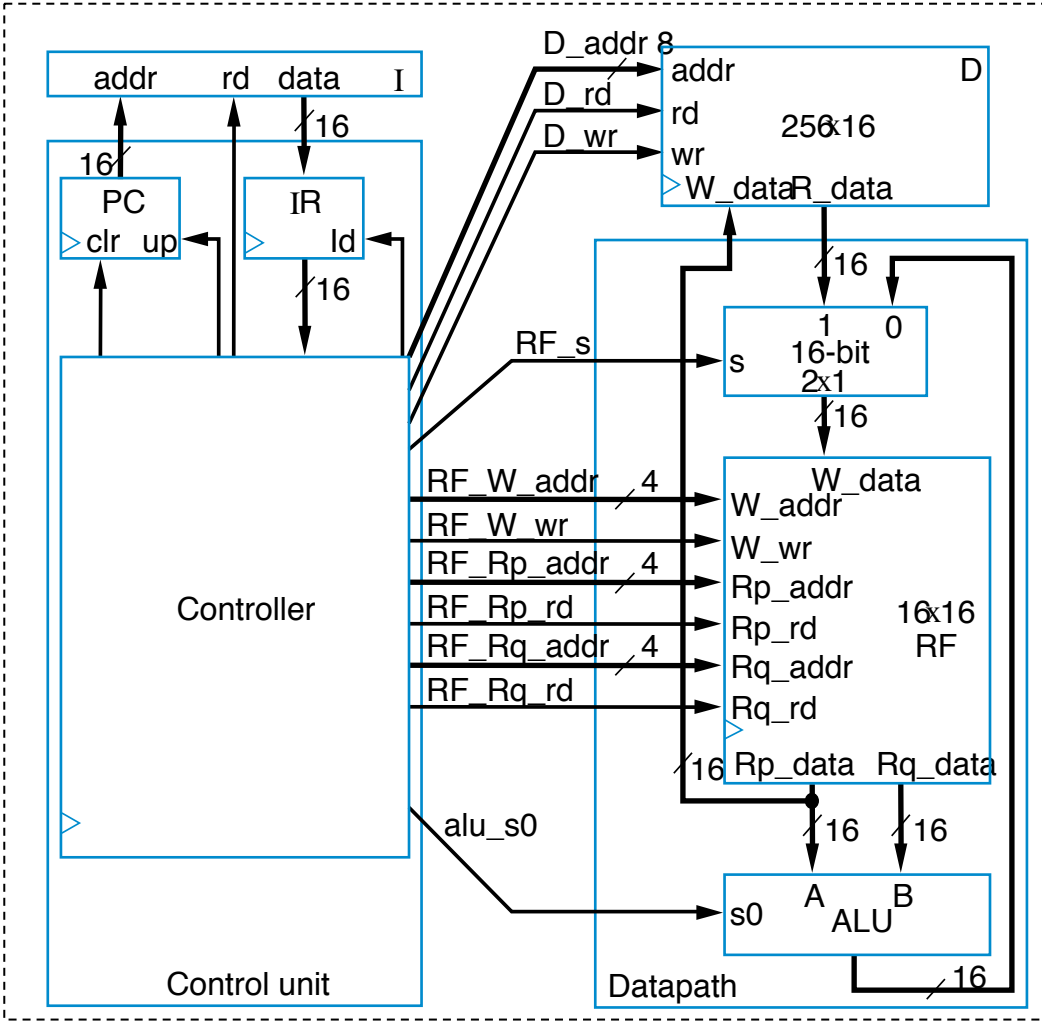
addr
rd
data
I
16
16
PC
clr
up
IR
ld
16
Controller
Control unit
D_addr
8
D_rd
D_wr
addr
rd
wr
W_data
R_data
D
256x16
16
1
0
16-bit
2x1
s
RF_s
16
RF_W_addr
4
RF_W_wr
RF_Rp_addr
4
RF_Rp_rd
RF_Rq_addr
4
RF_Rq_rd
W_data
W_addr
W_wr
Rp_addr
Rp_rd
Rq_addr
Rq_rd
16x16
RF
16
Rp_data
Rq_data
alu_s0
16
16
s0
A
B
ALU
16
Datapath